SYMETRICS Wall-mounted basin spout without pop-up waste - Brushed Durabrass (23kt Gold)

13 805 980

- 220mm projection
- fixed spout
- circular, air-enriched flow
- hole diameter 37 mm
- rosette 60 x 60 mm
- 1/2" connection
- plug-link mounting
- max. flow 7 l/min
- lead-free
- WRAS 1904065

For Touchfree control please order eSet Touchfree
WITH or WITHOUT temperature adjustment

Recommended miscellaneous

Concealed wall elbow - 35 085 970 90
●max. recess depth 163 mm
●min. recess depth 90 mm

SYMETRICS Wall-mounted basin spout without pop-up waste - Brushed Durabrass (23kt Gold)

13 805 980
mm [inches]

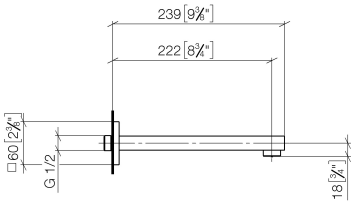

Flow rate chart

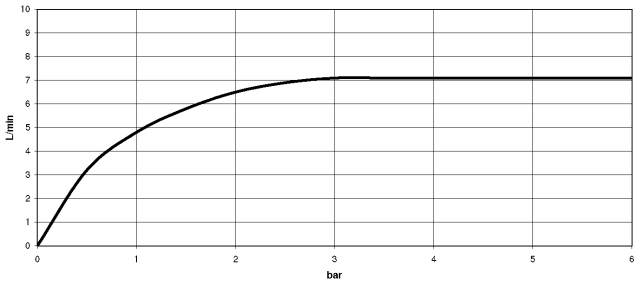

Certificates

LGA_18593. WRAS_1904065.

SYMETRICS Wall-mounted basin spout without pop-up waste - Brushed Durabrass (23kt Gold)
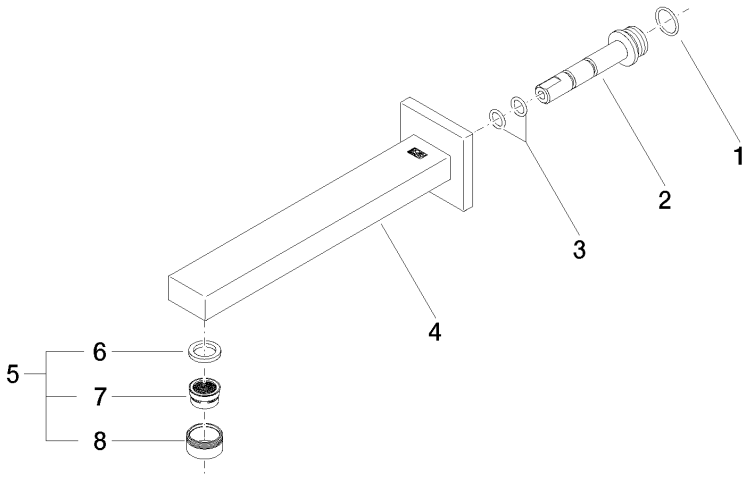
13 805 980